REVISIONS				
ZONE	REV	DESCRIPTION	DRAFTED	APPROVED

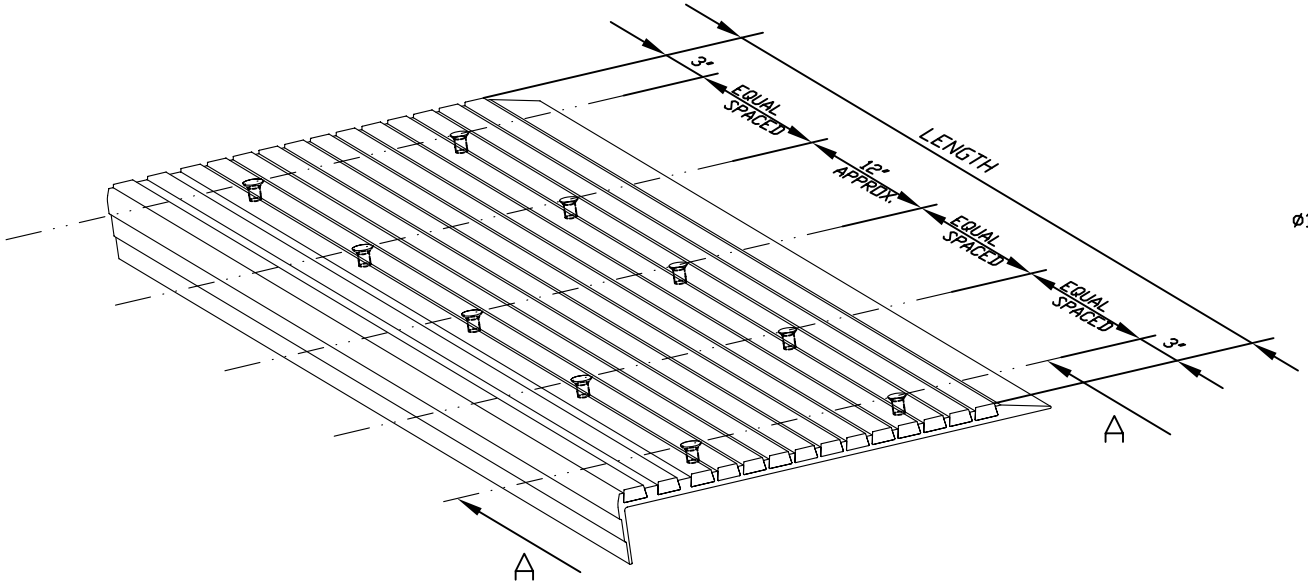

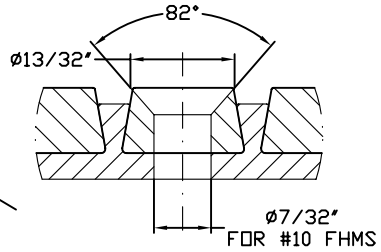

DETAIL B

(TYPICAL)

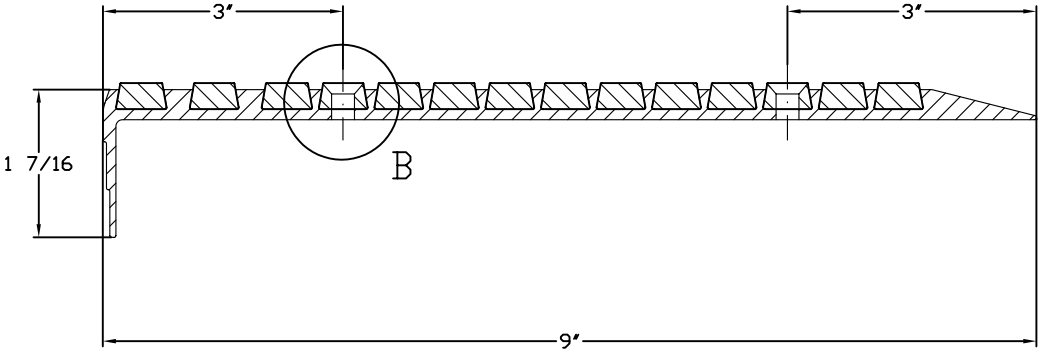

SECTION A-A

NOTICE – THIS DRAWING AND ALL OF THE INFORMATION THEREON IS THE CONFIDENTIAL PROPERTY OF ACL INDUSTRIES, INC. IT HAS BEEN PROVIDED TO YOU FOR A LIMITED PURPOSE AND IS NOT TO BE USED, REPRODUCED, OR DISCLOSED TO OTHERS FOR ANY OTHER PURPOSE.

MATERIAL: 6063–T6 ALUMINUM

TREATMENT

UNLESS OTHERWISE SPECIFIED DIMENSIONS ARE IN INCHES

TOLERANCES ARE		
FRACTIONS	DECIMALS	ANGLES
±1/16	.X ±.03	±1°
	.XX ±.015	
	.XXX ±.005	

APPROVALS		DATE
DRAFTED	CCR	27/04/2004
CHECKED		
APPROVED		

ACL INDUSTRIES, INC.
80 MAPLE ST.
MANCHESTER, NH 03103-5616
TEL: 1-603-669-1276
FAX: 1-603-669-1281

TITLE: RAM SERIES SAFETY STAIR NOSINGS TYPE 209–3

SIZE	PROJECT No.	DWG. NO.	REV.
C		ACL–01–28801	0

SCALE | QTY REQ'D N/A | SHEET