REVISIONS				
ZONE	REV	DESCRIPTION	DRAFTED	APPROVED

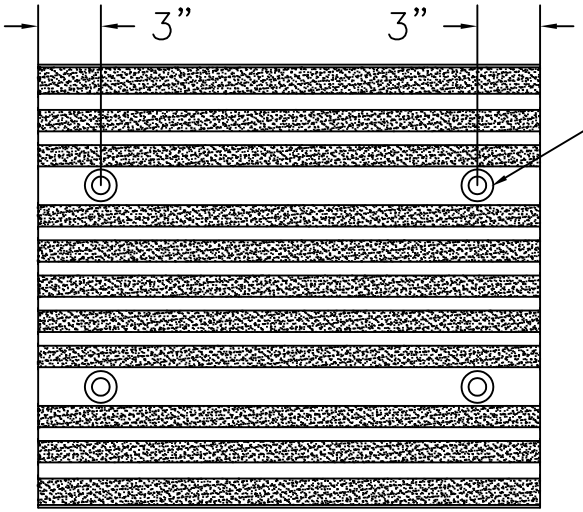

Drill Ø 0.28 (4x)
Cntrsnk 82 deg x Ø 0.507
For 1/4-20 FHMS

FILL PATTERN

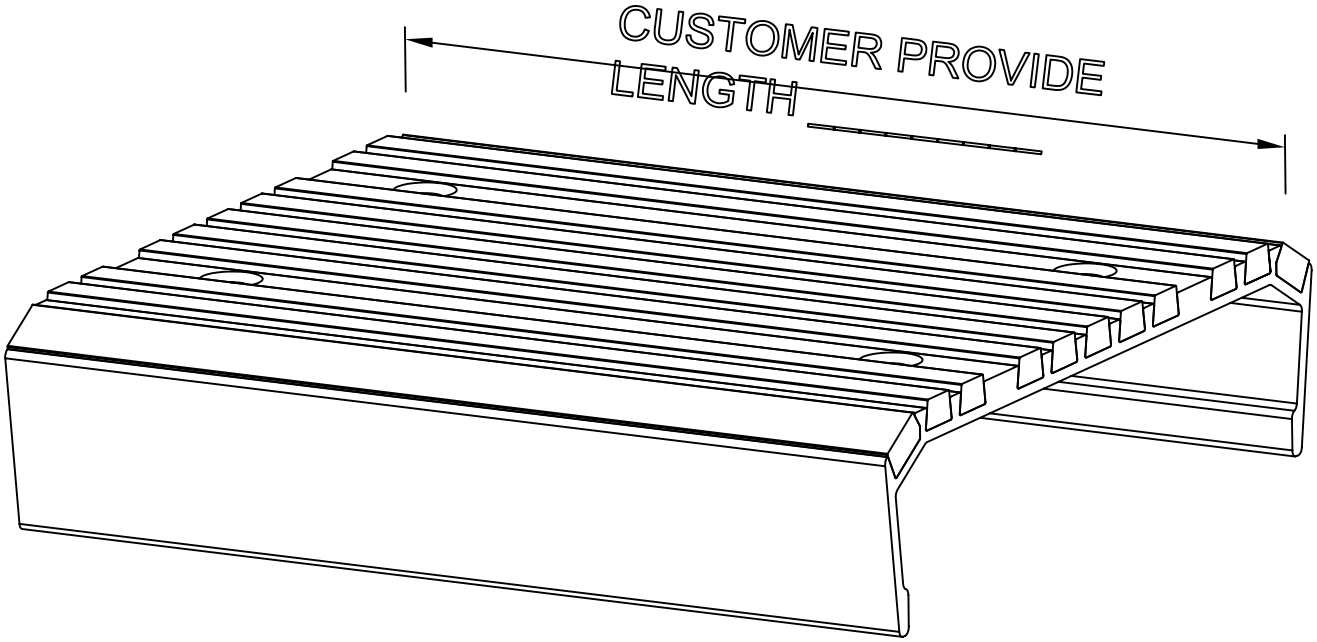

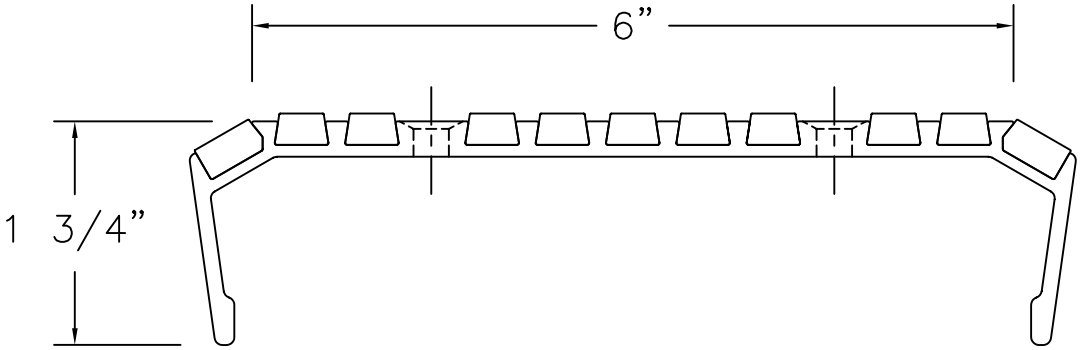

NOTICE – THIS DRAWING AND ALL OF THE INFORMATION THEREON IS THE CONFIDENTIAL PROPERTY OF ACL INDUSTRIES, INC. IT HAS BEEN PROVIDED TO YOU FOR A LIMITED PURPOSE AND IS NOT TO BE USED, REPRODUCED, OR DISCLOSED TO OTHERS FOR ANY OTHER PURPOSE.

MATERIAL

TREATMENT

UNLESS OTHERWISE SPECIFIED DIMENSIONS ARE IN INCHES
TOLERANCES ARE

FRACTIONS	DECIMALS	ANGLES
	.X ±.03	
±1/16	.XX ±.015	±1°
	.XXX ±.005	

APPROVALS	DATE
DRAFTED	
CHECKED	
APPROVED	

ACL INDUSTRIES, INC.
80 MAPLE ST.
MANCHESTER, NH 03103-5616
TEL: 1-603-669-1276
FAX: 1-603-669-1261

TITLE
ALUMINUM TREAD
SNC–6, TYPE II

SIZE	PROJECT No.	DWG. NO.	REV.
C		ACL–16916	
SCALE	QTY REQ'D N/A	SHEET	