REVISIONS				
ZONE	REV	DESCRIPTION	DRAFTED	APPROVED

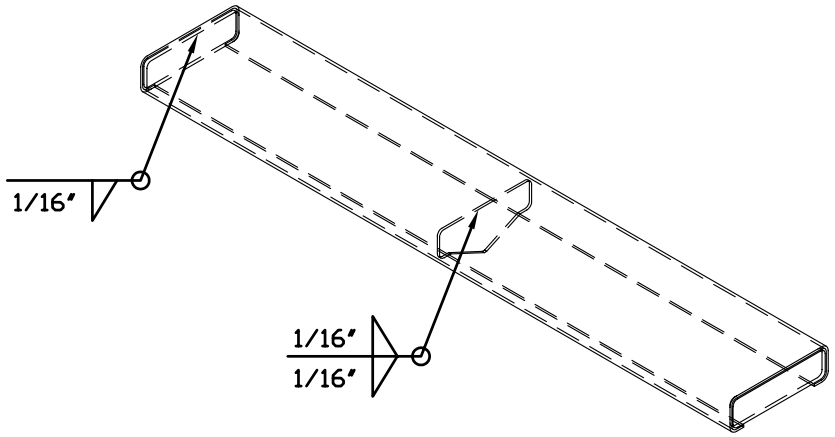

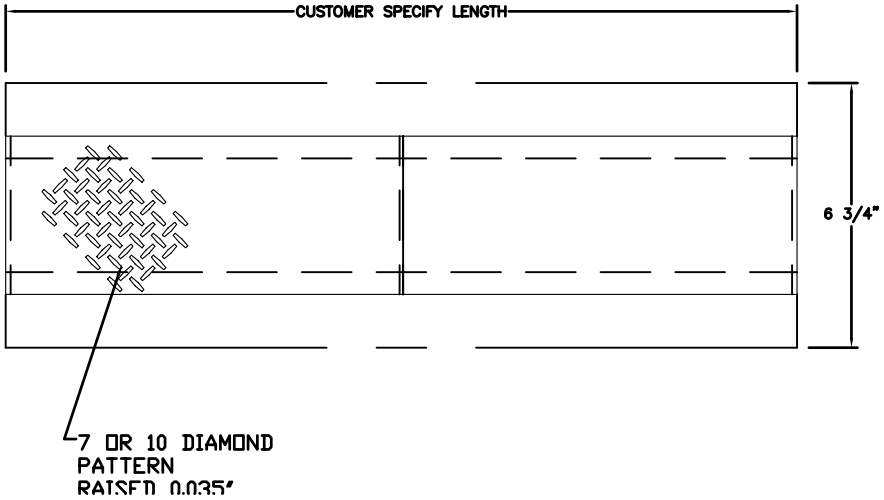

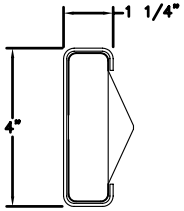

QTY REQ'D	CODE NO.	PART OR IDENTIFYING NO.	NOMENCLATURE OR DESCRIPTION	MATERIAL SPECIFICATION	ZONE	ITEM NO.

PARTS LIST

NOTICE – THIS DRAWING AND ALL OF THE INFORMATION THEREON IS THE CONFIDENTIAL PROPERTY OF ACL INDUSTRIES, INC. IT HAS BEEN PROVIDED TO YOU FOR A LIMITED PURPOSE AND IS NOT TO BE USED, REPRODUCED, OR DISCLOSED TO OTHERS FOR ANY OTHER PURPOSE.

MATERIAL: STEEL

TREATMENT: GALVANIZED

UNLESS OTHERWISE SPECIFIED DIMENSIONS ARE IN INCHES
TOLERANCES ARE:

FRACTIONS	DECIMALS	ANGLES
±1/64	.X ±.030	±0°30'
	.XX ±.010	
	.XXX ±.005	

APPROVALS	DATE
DRAFTED	
CHECKED	
APPROVED	

ACL INDUSTRIES, INC.

TITLE: SNS-4 TREAD, TYPE D

SIZE	PART/FIGU. No.	DWG. NO.	REV.
D		ACL-68901	

SCALE	QTY REQ'D	SHEET